ISDN Transformer

EPA4047

- Complies with CCITT G.961
- Remote Power Feeding to NT
- Operating Temperature : -25°C to +85°C

Electrical Parameters @ 25° C

Inductance (mH ± 10%)	Leakage Inductance (μH Typ.)	Interwinding Capacitance (pF Typ.)	Hipot (kVac)	Idc (mA)	Turns Ratio	DCR (Ω Max.)	
13.3	45	70	2.5	60	1.6:1.6:1:1	5.0 (I.C.)	5.0 (Line)

Package

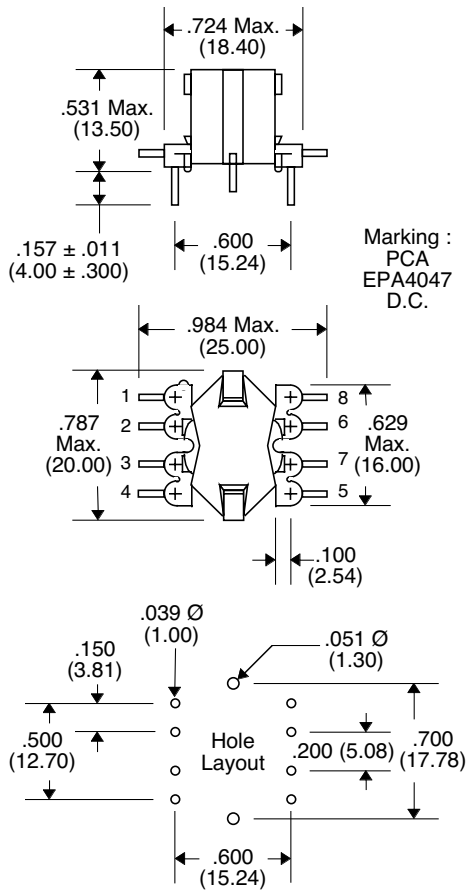

Schematic

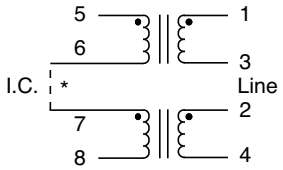

* = External Connection

Unless Otherwise Specified Dimensions are in Inches /mm ± .010 /.25

PCA ELECTRONICS, INC.
16799 SCHOENBORN ST.
NORTH HILLS, CA 91343

Product performance is limited to specified parameters. Data is subject to change without prior notice.

CSA4047 Rev. - 3/30/05 RR

TEL: (818) 892-0761
FAX: (818) 894-5791
http://www.pca.com